Behavior of DFIG under Different Control Topology at Different Fault Location in Wind Integrated Power System

Nishil K. Jain
Department of Electrical Engineering,
Charotar University of Science and Technology,
Changa, Anand-388421, India
Email: nishilkjain@gmail.com

Nirav C. Patel
Department of Electrical Engineering,
Charotar University of Science and Technology,
Changa, Anand-388421, India
Email: niravpatel665@gmail.com

Mihir Mehta,
Department of Electrical Engineering,
Charotar University of Science and Technology,
Changa, Anand-388421, India
Email: mihirmehta.ee@charusat.ac.in

Kashish K. Jain
Email: kashishkjain@gmail.com

***Abstract*— Several technical challenges are observed during grid integrations with the renewable power system comprising of models which precisely reckon of short circuit contributions and system protection studies. Compared to traditional generators, Wind Turbine Generators (WTGs) integrated through converter produce different current and power waveforms which may contain harmonics during normal as well as abnormal conditions. This paper proposes a sequential control topology that eliminates the second harmonic components and accounts for impacts on electromagnetic torque, active and reactive power with Doubly Fed Induction Generator (DFIG) under different fault conditions.**

Index terms — Doubly Fed Induction Generator, Second Order Harmonics, Wind Turbine Generators and Unbalanced Faults.

Introduction

The fossil fuels are decreasing & pollution is increasing due to traditional methods for power generation throughout the world. Due to this the pollution, more focus on renewable energy is getting in economical point of view. So the most feasible & usable sources of renewable energy are wind power generation & photovoltaic sources. But in wind power generation issues are faced as speed of wind may not be constant. Wind turbine is kept shut down when speed of wind is below the cut-in speed. Wind power generation acts as current source. It injects harmonic current to the system or act as harmonic current source. Due to height of tower lightning strokes may causes the following damages:

- Heating of blades & ball-bearing which may cause them to melt.
- Increasing potential of wind farm.
- Voltage drop along the cable.

In this paper impact of different type of faults at different location is investigated in the wind park consisting of 45 wind turbine using simulation in EMTP-RV environment. Here the impact and behavior of Wind Park during fault is analysis in terms of Torque, Active and Reactive power during conventional and proposed method of control used for doubly fed induction generator (DFIG). In addition, fault existence in any wind park transformer causes to high cost of fixing. Different faults like single line to ground, double line to ground & triple line to ground faults at bus 4 and at bus 6 in conventional method of control & in proposed method of control for DFIG.

I. Basic Concept

1. Doubly Fed Induction Generator :

DFIG (Doubly Fed Induction Generator), are widely utilized in wind turbine. It uses an induction generator with a poly-phase wound rotor assembly with brushes for access to the rotor windings. The rotor winding is connected to the main grid by self-commutated AC/DC/AC converters allowing controlling the slip ring voltage of the induction machine in magnitude & phasing angle. Schematic diagram of DFIG is shown in fig 1.

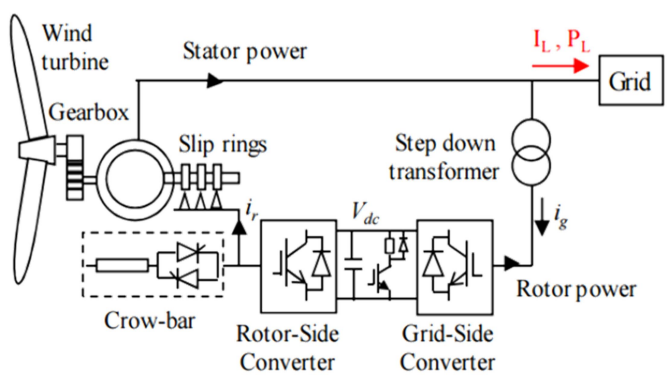

Fig. 1 Schematic diagram of DFIG

Electrical Power produces by doubly fed induction machine is independent of speed as compare to singly fed induction generator. It is possible to understand a variable speed wind generator allows to adjust the mechanical speed to the wind

speed & hence operating the turbine at the aerodynamically optimal point for a certain wind speed range.

Here Rotor Side Converter (RSC) & Grid Side Converter (GSC) are used in DFIG. In DFIG the power is extracted from stator side and from rotor side. There is benefit of getting power from stator side and rotor side because converter rating used in this topology is 33% lesser than the converter rating, used while power is extracting from rotor side. The connection diagram of DFIG available in EMTP-RV is shown in fig 2.

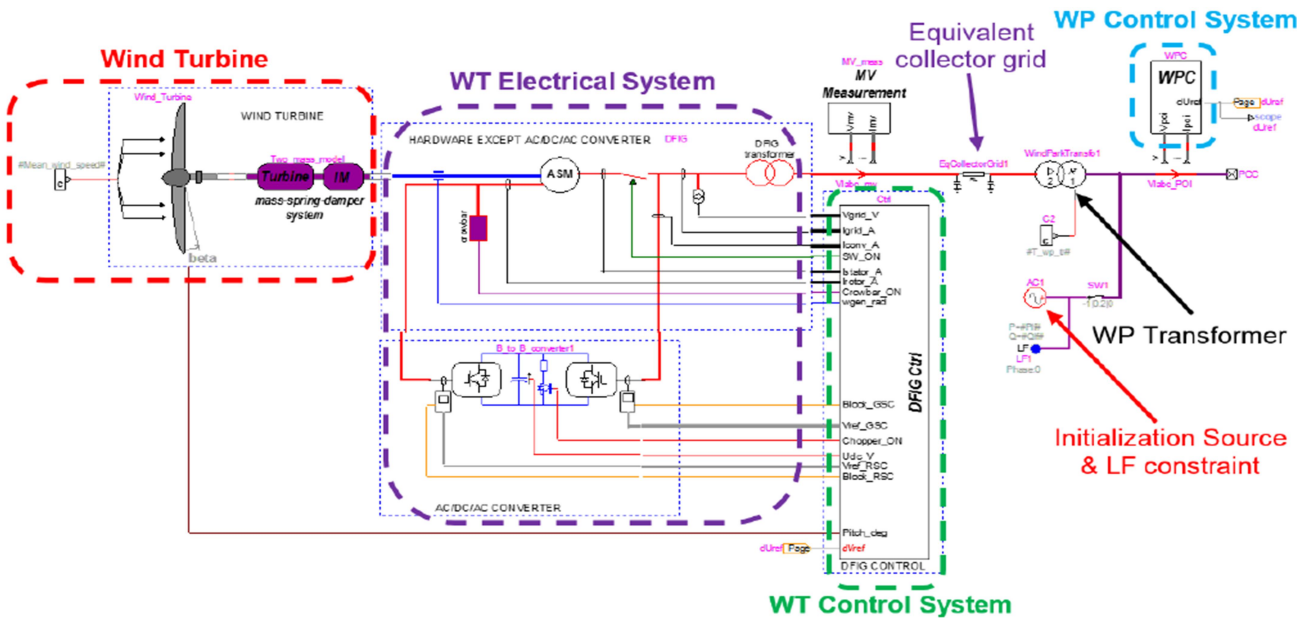

Fig. 2 EMTP diagram of the DFIG based Wind Park

2. Type of Control :

In DFIG there are 2 type of control topology are used. They are conventional method & proposed method.

a) Conventional Mode of Control:

In conventional mode of control at grid side converter (GSC), the d-axis reference current of converter is calculated by proportional outer voltage control which is given by

$$i'_{dg} = K_V(V' - V^+_{wt}) \quad (1)$$

where K_V is the voltage regulator gain. Positive sequence voltage (V') is calculated by wind park control for wind turbine transformer. The positive sequence voltage at wind turbine transformer is not measure directly by wind turbine controller & approximately by

$$V^+_{wt} = (V^+_{dwt})^2 + (V^+_{qwt})^2 \quad (2)$$

where

$$V^+_{dwt} = \widetilde{V^+_{dwt}} + R_{tr}\widetilde{I^+_{dwt}} - X_{tr}\widetilde{I^+_{qwt}} \quad (3)$$

$$V^+_{qwt} = \widetilde{V^+_{qwt}} + R_{tr}\widetilde{I^+_{qwt}} + X_{tr}\widetilde{I^+_{dwt}} \quad (4)$$

In (2) - (4), V^+_{dwt} & V^+_{qwt} are the d-axis & q-axis positive sequence voltage at wind turbine transformer, $\widetilde{V^+_{dwt}}$ & $\widetilde{V^+_{qwt}}$ are the d-axis and q-axis positive sequence voltage at wind turbine terminals, $\widetilde{I^+_{dwt}}$ & I^+_{qwt} are the d-axis & q-axis positive sequence current of wind turbine, R_{tr} & X_{tr} are the resistance and reactance values wind turbine transformer.

The control scheme of conventional method is illustrated in fig 3. In this figure, i_{qm} and i_{dm} are the q- and d-axis currents of the MSC, i_{qg} and i_{dq} are the q- and d-axis currents of the GSC, V_{dc} is the dc bus voltage, T is the electromagnetic torque of the DFIG, and V^+_{wt} is the positive sequence voltage at FSC transformer MV terminal.

In the control scheme presented in Fig 3, the MSC operates in the stator flux reference (SFR) frame and the GSC operates in the stator voltage reference (SVR) frame. i_{qm} is used to control T, i_{dg} is used to maintain $V_{dc}$and i_{qg} is used to control V^+_{wt}.

Both MSC and GSC are controlled by a two-level controller. The slow outer control calculates the reference dq-frame currents (i'_{dm} , i'_{qm}, $i'_{dg}$and i'_{qg}) and the fast inner control allows controlling the converter ac voltage reference that will be used to generate the modulated switching pattern.

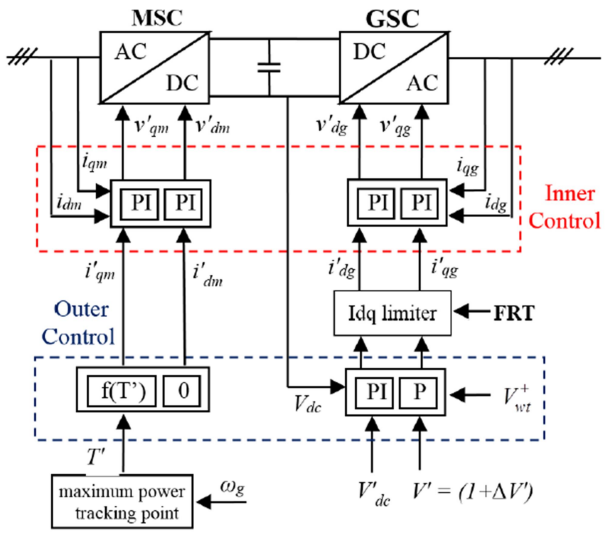

Fig. 3 Schematic diagram of DFIG WT control in Conventional Method

b) Proposed Mode of Control:

Conventional method of control is not expected to inject any negative sequence current to grid when faults occur or any unbalanced loading condition happens. The terminal voltage of wind turbine consists of negative sequence component when unbalanced loading condition or any faults occurs. The instantaneous active & reactive power of unbalanced grid condition can be known as

$$p = P_0 + P_{C2}\cos(2\omega t) + P_{S2}\cos(2\omega t) \quad (5)$$

$$q = Q_0 + Q_{C2}\cos(2\omega t) + Q_{S2}\cos(2\omega t) \quad (6)$$

where P_0 & Q_0 are the average values of the instantaneous active and reactive powers respectively, whereas P_{C2}, P_{S2}, Q_{C2} and Q_{S2} represent the magnitude of the second harmonic oscillating terms in the instantaneous powers.

$$P_0 = \frac{3}{2}\left(v_d^+ i_d^+ + v_q^+ i_q^+ + v_d^- i_d^- + v_q^- i_q^-\right) \quad (7)$$

$$P_{C2} = \frac{3}{2}\left(v_d^- i_d^+ + v_q^- i_q^+ + v_d^+ i_d^- + v_q^+ i_q^-\right) \quad (8)$$

$$P_{S2} = \frac{3}{2}\left(v_q^- i_d^+ - v_d^- i_q^+ - v_q^+ i_d^- - v_d^+ i_q^-\right) \quad (9)$$

$$Q_0 = \frac{3}{2}\left(v_q^+ i_d^+ - v_d^+ i_q^+ + v_q^- i_d^- - v_d^- i_q^-\right) \quad (10)$$

$$Q_{C2} = \frac{3}{2}\left(v_q^- i_d^+ - v_d^- i_q^+ + v_q^+ i_d^- - v_d^+ i_q^-\right) \quad (11)$$

$$Q_{S2} = \frac{3}{2}\left(-v_d^- i_d^+ - v_d^- i_q^+ + v_d^+ i_d^- + v_q^+ i_q^-\right) \quad (12)$$

where v_d^+, v_q^+ & i_d^+, i_q^+ are calculated by means of Park transform & represent the dq components of the positive-sequence voltage and current vectors expressed on a synchronous reference frame rotating at the fundamental grid frequency ω, whereas v_d^-, v_q^- & i_d^-, i_q^- are the components of the negative-sequence voltage and current vectors lying on a synchronous reference frame rotating at -ω respectively.

The sequence decoupling method shown in fig 4 is used in EMTP. In this method, a combination of low-pass filter (LPF) & double line frequency park transform (P^{-2} *and* P^{+2}) is used to produce the oscillating signal, which is then subtracted. The block C & P represent the Clarke & Park transformation matrices, & the superscripts ± 1 & ± 2 correspond to direct and inverse transformation at line frequency & double line frequency, respectively.

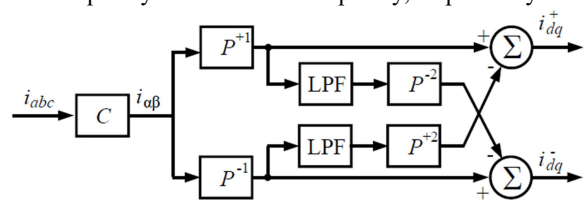

Fig. 4 Sequence extraction using decoupling method

The DFIG converter control scheme of proposed method is illustrated in fig. 5. In this fig i_{qr} and i_{dr} are the q-and d-axis currents of the RSC, i_{qg} and i_{dg} are the q- and d-axis currents of the GSC, V_{dc} is the dc bus voltage, P is the active power output of the DFIG, and V_{wt}^+ is the positive sequence voltage at DFIG transformer MV terminal. The RSC operates in SFR frame and the GSC operates in SVR frame. i_{qr} and i_{dr} are used to control P and V_{wt}^+, respectively. On the other hand, i_{dg} is used to maintain the dc bus voltage (V_{dc}) and i_{qg} is used to support the grid with reactive power during faults.

Both RSC and GSC are controlled by a two-level controller. The slow outer control calculates the reference dq-frame currents (i'_{dr}, i'_{qr}, i'_{dg} and i'_{qg}) and the fast inner control allows controlling the converter ac voltage reference.

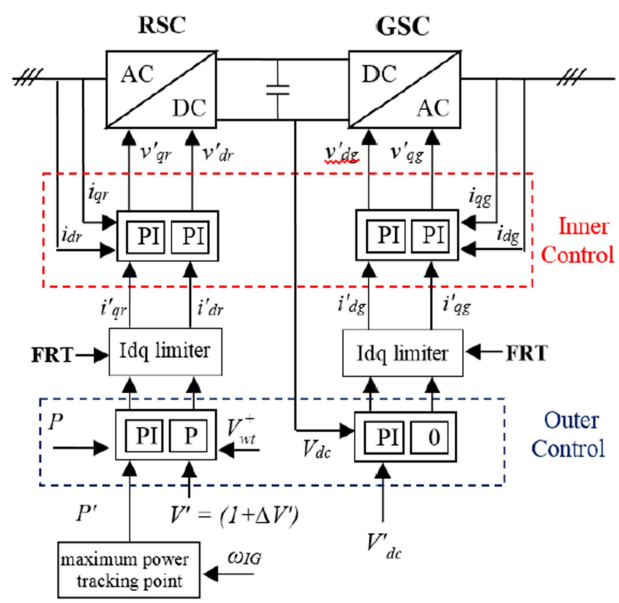

Fig. 5 Schematic diagram of DFIG WT control in Proposed Method

II. SYSTEM DISCRIPTION

The single line diagram of test system having system voltage of 120 kV and 60 Hz frequency with 6 bus system is shown in fig 6.

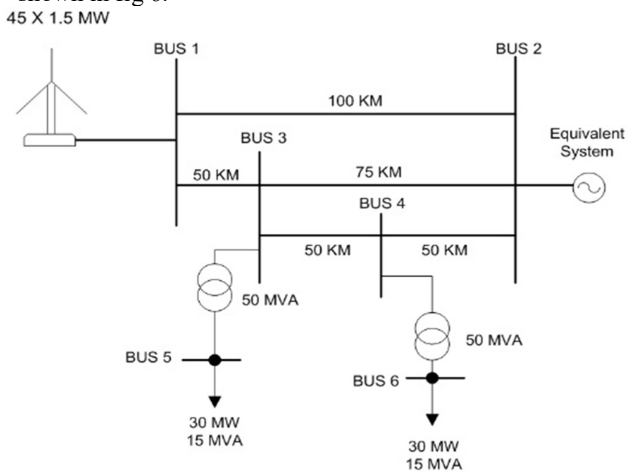

Fig. 6 Test System

In this system wind park consist of 45 wind turbine with 1.5 MW power. DFIG is operating at full load at unity power factor. Using EMTP software environment we simulate this test system in time domain. Other parameters of DFIG & rating of single wind turbine used in the test system are shown in Table 1 & 2 respectively. In this test system different type of faults i.e. single line to ground, double line to ground and triple line to ground faults are created bus 4 and at bus 6.

Table 1: Wind Park Parameters

Number of wind turbine	45
Frequency	60 Hz
Collector grid nominal Voltage	34.5 KV RMS LL
Transmission grid nominal voltage	120 KV RMS LL

Table 2: Single Wind Turbine Parameter

Wind Turbine rated power	1.667 MVA
Wind Turbine active power	1.5 MW
Generator nominal Voltage	0.575 KV RMS LL

III. TESTS SCENARIO

Fault Location	Case	Type of Fault	Control Scheme
Bus 4	Case A	LG Fault	Conventional Control
			Proposed Control
	Case B	LLG Fault	Conventional Control
			Proposed Control
	Case C	LLLG Fault	Conventional Control
			Proposed Control
Bus 6	Case A	LG Fault	Conventional Control
			Proposed Control
	Case B	LLG Fault	Conventional Control
			Proposed Control
	Case C	LLLG Fault	Conventional Control
			Proposed Control

IV. RESULT

In this test system at a time one fault is created. We suppose that fault occurs at 4.25 seconds & faults remains up to 4.75 seconds. The timing for occurrences of fault remains constant. Waveform of different types of fault at different buses in conventional method & proposed method of control are shown in below figures 7 to 12.

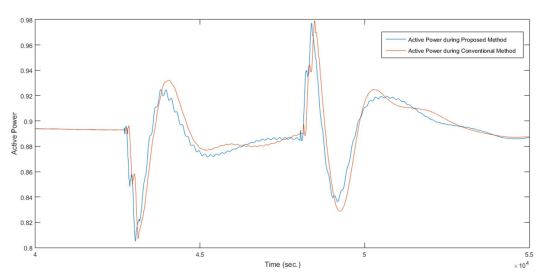

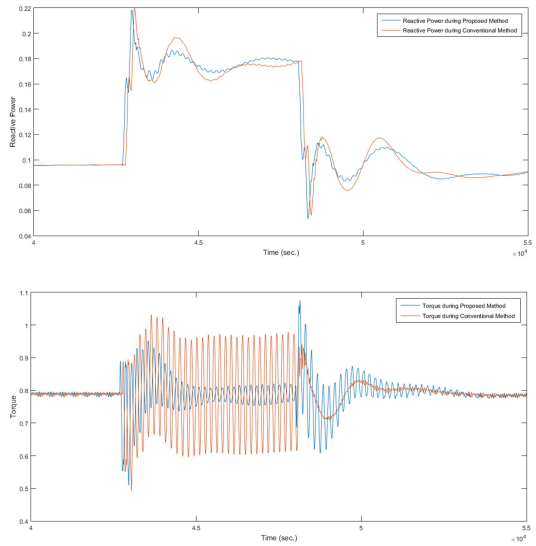

Fig. 7 Waveform of Active Power, Reactive Power & Torque during L-G fault at bus 4

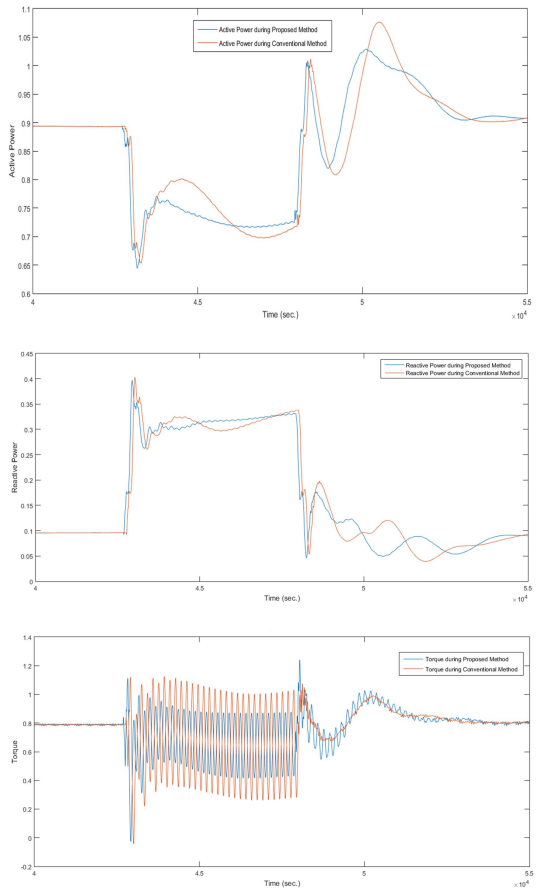

Fig. 8 Waveform of Active Power, Reactive Power & Torque during L-L-G fault at bus 4

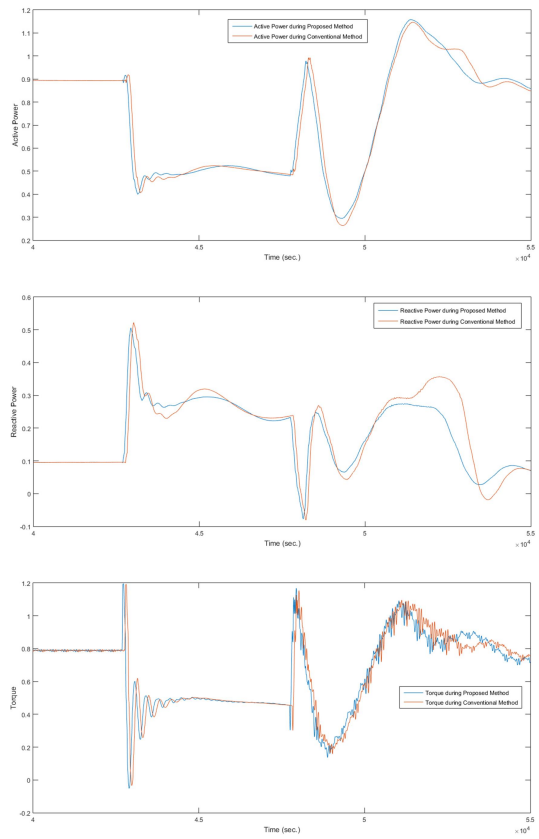

Fig. 9 Waveform of Active Power, Reactive Power & Torque during L-L-L-G fault at bus 4

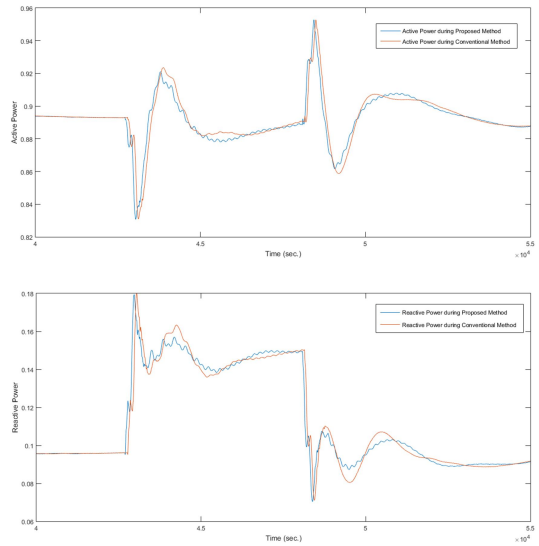

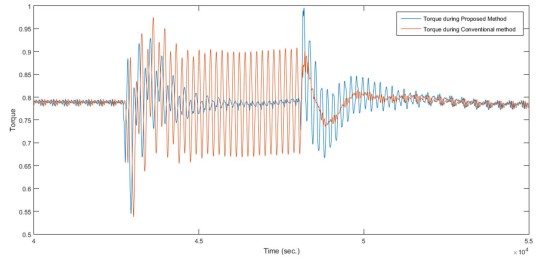

Fig. 10 Waveform of Active Power, Reactive Power & Torque during L-G fault at bus 6

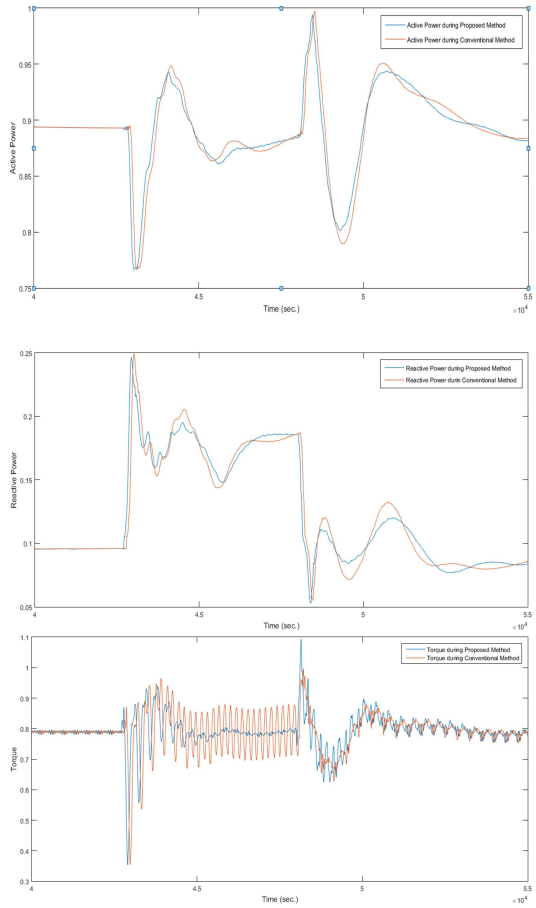

Fig. 11 Waveform of Active Power, Reactive Power & Torque during L-L-G fault at bus 6

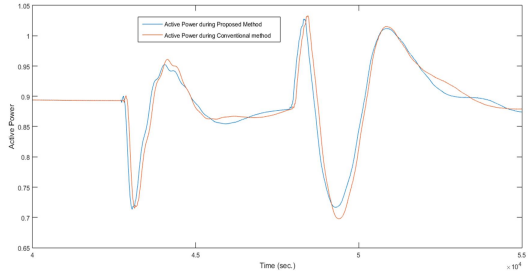

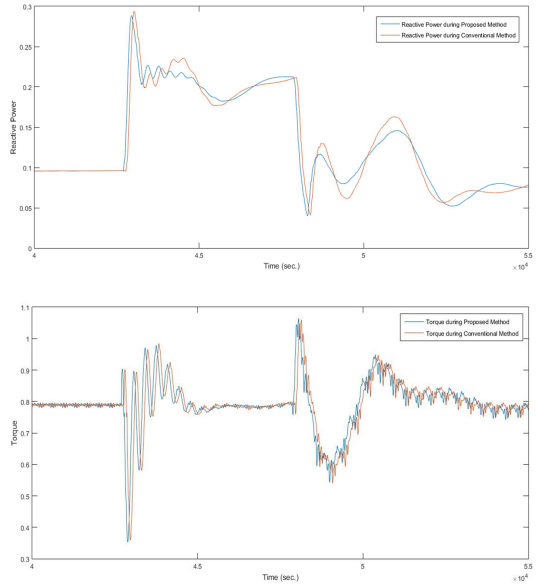

Fig. 12 Waveform of Active Power, Reactive Power & Torque during L-L-L-G fault at bus 6

Here by creating fault according to test scenario. It is observe that the magnitude of Active Power, Reactive Power & Torque in proposed mode of control is somewhat less than the conventional mode of control for DFIG during the fault period. By this we can say that when DFIG is working in proposed method of control that DFIG will have less effect during faults at bus 4 & bus 6 in the system as compare to conventional method of control.

V. Conclusion

In this paper we observe & analysis the waveform of faults at different buses, there is a variation in torque, active & reactive power of the wind park. A conclusion can be made that results of proposed method of control are better compare to conventional method of control of DFIG. Based on these results a precise model of wind integrated system can be modeled by which we can get better results and reliable power to the users. By this we can say that when DFIG is working in proposed method of control that DFIG will have less effect during faults at bus 4 & bus 6 in the system as compare to conventional method of control.

References

[1] Nowdeh, Saber Arabi, Mohsen Chitsaz, and Saheb Khanabdal. "Evaluation of 1-phase, 3-phase and Lightning Faults on Wind Farms using EMTP-RV." *Majlesi Journal of Electrical Engineering* 8.1 (2014): 53-61.

[2] Faig, J., et al. "Analysis of faults in power distribution systems with distributed generation." *International Conference on Renewable Energies and Power Quality (ICREPQ'10), Granada, Spain, 23th to 25th March*. 2010.

[3] Babu, Y. Mahesh, B. Durga Prasad, and B. Vijay Vihari. "Fault analysis of wind generator connected power system using wavelet technique." *2014 International Conference on Green Computing Communication and Electrical Engineering (ICGCCEE)*. IEEE, 2014.

[4] Inno Davidson and Immanuel Mbangula, "Power System Modeling and Fault Analysis of NamPower's 330 kV HVAC Transmission Line", Journal of Power and Energy Engineering, August 2014.

[5] Feltes, C., et al. "High voltage ride-through of DFIG-based wind turbines." *2008 IEEE Power and Energy Society General Meeting-Conversion and Delivery of Electrical Energy in the 21st Century*. IEEE, 2008.

[6] Teodorescu, Remus, Marco Liserre, and Pedro Rodriguez. *Grid converters for photovoltaic and wind power systems*. Vol. 29. John Wiley & Sons, 2011.

[7] T. Kauffmann, U. Karaagac, I. Kocar, H. Gras, J. Mahseredjian and F. Farantatos, "Phasor domain modeling of Type III wind turbine generator for protection studies," *Proc. 2015 IEEE PES General Meeting*, Denver, CO, 26-30 July 2015.

[8] U. Karaagac, H. Saad, J. Peralta, J. Mahseredjian, "Doubly-fed induction generator based wind park models in EMTP-RV", April 2016, Polytechnique Montréal.

[9] J. Mahseredjian, L. Dubé, L. Gérin-Lajoie, **"New Advances in the Simulation of Transients with EMTP: Computation and visualization Techniques,"** Proceedings of 7th *International conference on Modeling and Simulation of Electric Machines, Converters and Systems*, August 18-21, Montreal, 2002.

[10] Ch. Eping, J. Stenzel and M. PÄoller, H. MÖuller, "Impact of Large Scale Wind Power on Power **System Stability,"** Fifth International Workshop on Large-Scale Integration of Wind Power and Transmission Networks for Offshore Wind Farms, Glasgow, Scotland, April 2005.